THE USE OF MESOSCALE NUMERICAL MODELS TO ASSESS WIND DISTRIBUTION AND BOUNDARY-LAYER STRUCTURE IN COMPLEX TERRAIN

(A Review Paper)

R. A. PIELKE

Dept. of Atmospheric Science, Colorado State University, Fort Collins, CO 80523, U.S.A.

(Received 4 April, 1984)

Abstract. Mesoscale models which can be used to assess wind and turbulent structure in complex terrain are overviewed. The different types of models – diagnostic and prognostic are discussed and the significant physical processes which each can handle realistically are reviewed. Examples of specific applications of these models are presented.

1. Introduction

Numerical models have been used for over thirty years in synoptic meteorology (Namias, 1983). Not until the early 1970's, however, was this tool applied to mesoscale atmospheric features. Mesoscale systems are defined in this paper as being primarily hydrostatic, but which have a significant divergent component of the wind above the planetary boundary layer.

The purpose of this paper is to overview the current status of the use of this tool in assessing wind energy and boundary-layer structure in complex terrain. A much more detailed discussion of mesoscale meteorological models is presented in Pielke (1984a).

2. Types of Models

There are two broad categories of mesoscale numerical models:
- prognostic models;
- diagnostic models.

In this paper, they will be distinguished in the following way:

(i) prognostic models utilize time-dependent partial differential equations (which describe the behavior of fluid or gaseous flow) to integrate forward in time.

(ii) diagnostic models either eliminate the time dependency completely from the equations, or use the time derivative term over *one* finite time step. This type of model does not integrate forward in time.

3. Diagnostic Models

Examples of diagnostic models include those of Patnack *et al.* (1983), Fosberg *et al.* (1976), Collier (1975, 1977), Rhea (1977), Bell (1978), Dickerson (1978), Danard (1977),

Boundary Layer Meteorology **31** (1985) 217–231. 0006–8314/85/0313–0217$02.55.

and Sherman (1978). Illustrative results from three of them (Collier, 1977; Dickerson, 1978; Fosberg *et al.*, 1976) are shown in Figures 1–3.

A major problem with this particular type of model, however, is that part of the wind flow must be known before a simulation can be performed. Either observations can be made and the model simulation forced to correspond closely to those measurements in their vicinity or the disturbance to the wind due to the complex terrain is assumed to disappear at some level.

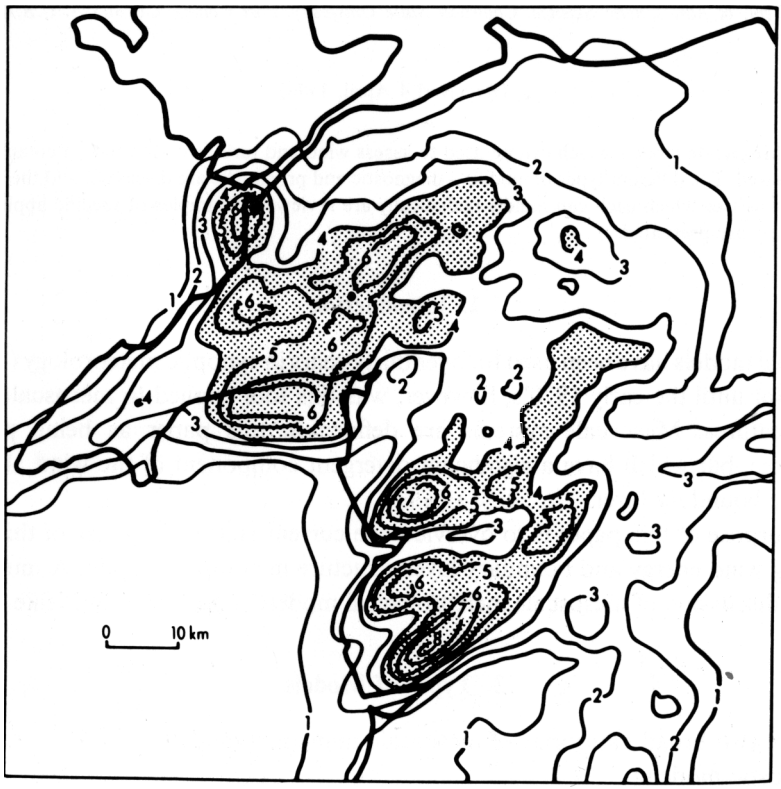

Fig. 1. A rainfall distribution in mm over North Wales in Great Britain predicted for 1100–1200 GMT on August 14, 1974 using a diagnostic model with one kilometer horizontal resolution (from Collier, 1977).

The incorporation of observational data into a diagnostic model is attractive because physical constraints are applied through the partial differential equations in order to assure that the simulation is at least physically consistent with the available observation pattern. The use of the equation for the anelastic continuity of mass, for instance, even if applied in the absence of the other conservation equations, will assure that the simulated wind field conserves mass. Unfortunately, however, unless extensive data are available at the surface and aloft, corresponding to the vertical and horizontal scales of the mesoscale system of interest, such a representation will be necessarily inaccurate.

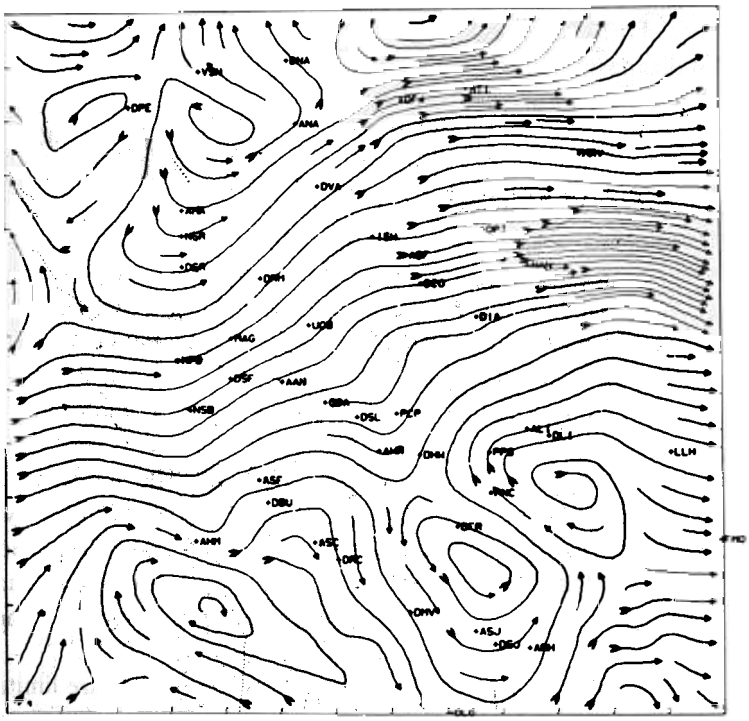

Fig. 2. An estimate of the flux of air in $m^2 s^{-1}$ below inversion height in a portion of the San Fransisco Bay area on July 26, 1973 at 2030 PST obtained using a diagnostic model. The spacing between tick marks is 10 km (from Dickerson, 1978).

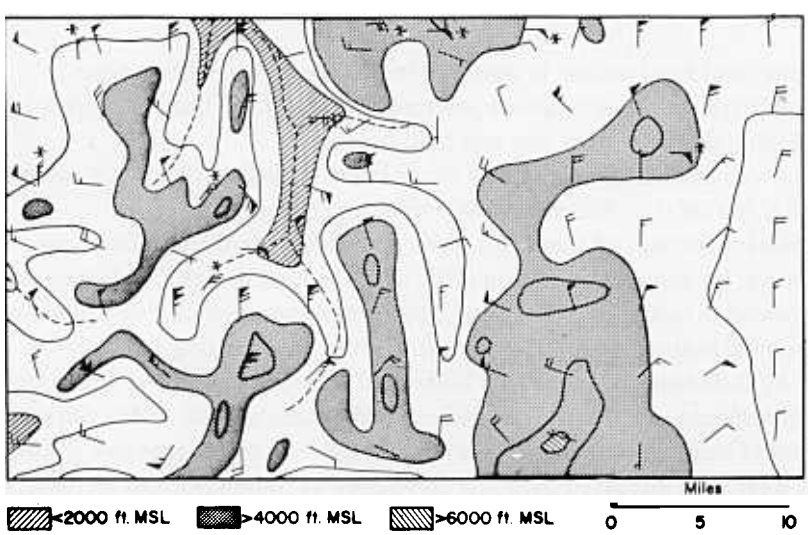

Fig. 3. An evaluation of the wind field in complex terrain in a portion of the Oregon Cascades at 1600 LST on August 8, 1963. Pennants on the wind flag indicate 5 m s^{-1}; a full barb, 2 m s^{-1}; a half barb 1 m s^{-1}. The observed winds have an asterisk over them (from Fosberg *et al.*, 1976).

In the absence of meteorological observations, however, knowledge of terrain-forcing can still permit diagnostic model simulations, as long as all of the following are fulfilled:
(i) a strong wind flow exists in the lower troposphere;
(ii) a strong lid (i.e., strong inversion) occurs below the level of the highest terrain;
(iii) the boundary layer below the inversion is well mixed;
(iv) differential heating of the terrain surface is minimal.
With this situation, the existence of a strong inversion damps vertical motion at that level and above; so all mass continuity must occur below that height. This inversion and the stratification above must be strong enough so that upward wave propagation is rapidly dissipated above the inversion. The existence of a well-mixed boundary layer and strong winds, along with the absence of surface differential heating suggests that the winds are more-or-less uni-directional with height. Thus air flows over terrain obstacles which are below the inversion height but around those that reach above that level. Blocking can occur when most of the terrain is above the inversion. The model described by Dickerson (1978), already illustrated in Figure 2, is a good example of this type of tool, where the product of the sub-inversion mean wind and height of inversion base is averaged in such a way that mass is conserved and any available observational data are changed in a minimal way. When conditions (i)–(iv) are met, prognostic models may be unable to provide better forecasts.

Except for this specific application, however, diagnostic models are limited in their applicability. They cannot, for example, represent wind flow reversals unless observations of this phenomena are available – in which case they become sophisticated physically-consistent objective analysis schemes.

4. Prognostic Models

Prognostic models of airflow in complex terrain have been of two types:
- those which simulate circulations generated by differential heating in complex terrain (i.e., mountain-valley flow, sea and land breezes)
- those which simulate perturbations to the larger scale flow due to air advecting over irregular terrain (i.e., forced airflow over rough terrain).

The dominant forcings of these two types of systems are distinct from one another.

As shown, for instance, in Martin (1981), for sea-land breeze circulations (which are closely related to mountain-valley flows), the flow pattern becomes very nonlinear when the differential heating becomes significant. For this case, heating at the surface is mixed upward by turbulence resulting in a horizontal pressure gradient in the lower troposphere. In response to this pressure gradient, accelerations result which can concentrate the region of heating, resulting in an even stronger horizontal pressure gradient force. Only as a result of increased frictional dissipation as these velocities increase, or when the heating is removed, is this positive feedback stopped. Without extensive observations so that the flow reversal associated with this mesoscale system can be resolved, diagnostic models cannot represent this feature.

Mountain-valley winds are of two types – the downslope (i.e., drainage) and upslope

flows along valley walls, and the in- and out-valley flow which develops as a result of pooling and evacuation of air from within a valley. Both of these features are discussed by Defant (1951) and McNider (1981). Three-dimensional model simulations are required to represent these features since in- and out-valley flows are inherently three-

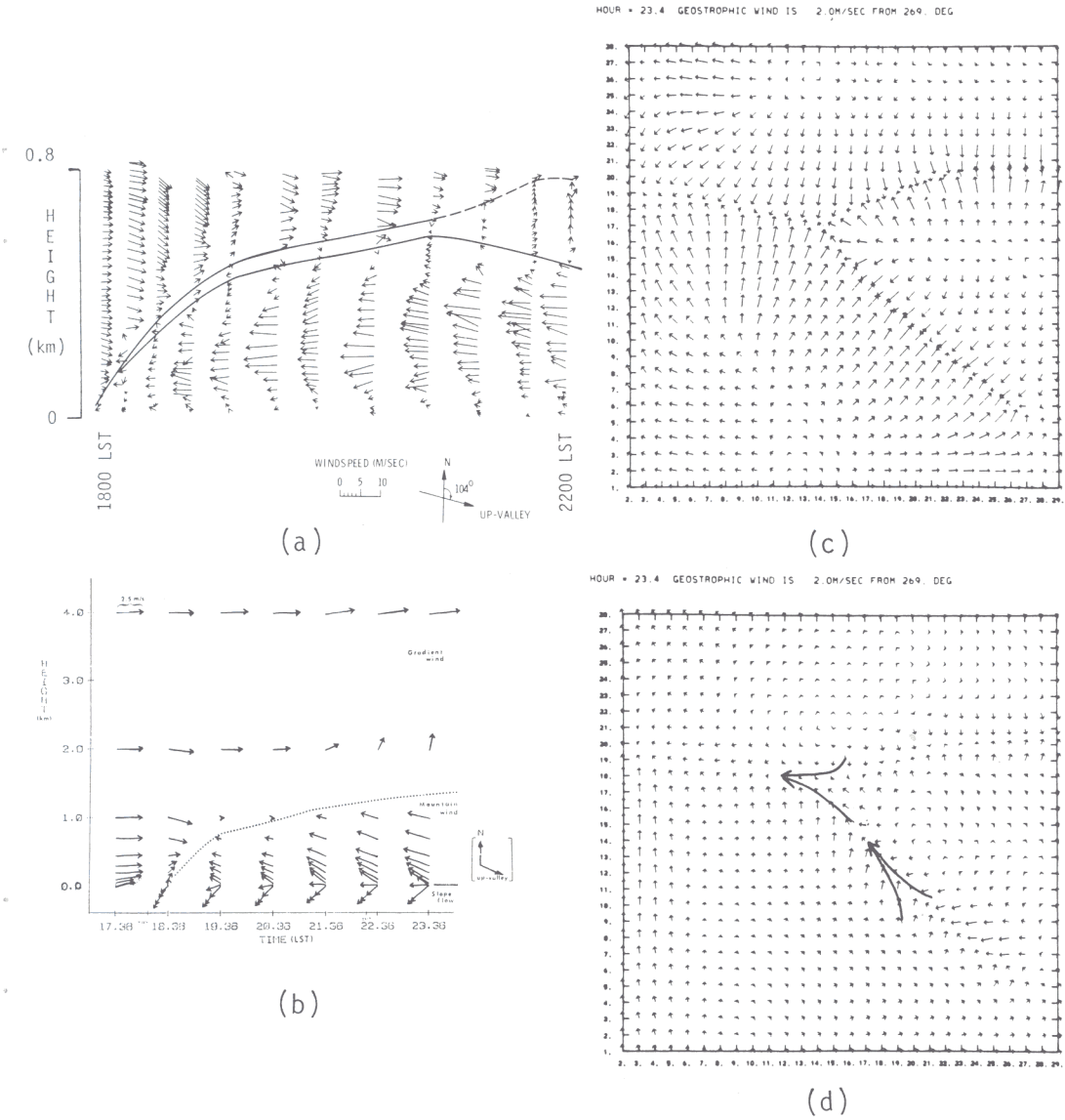

Fig. 4. An observation (a) and corresponding prediction (b) of the time history of the airflow and inversion depth at a site in a valley system in western Colorado on October 15, 1978, along with the simulated winds at (c) 5 m and (d) 50 m above the terrain at 2330 LST. Figure 4a is originally from Whiteman (1981) and Figures 4b–d is reproduced from McNider and Pielke (1984). Note that the scales in Figures 4a and b are different. One grid increment in Figures 4c and d corresponds to 1 km.

dimensional. Model simulations of this type are few and include those of McNider (1981), McNider and Pielke (1984), and Bader and McKee (1983). Reproduced as Figure 4 are results from the McNider and Pielke (1984) simulation of the nighttime flow in the Gore-Eagle Valley of Colorado, as comparted with the observations of Whiteman (1981). Although the depth of outflow and its intensity are different, the salient observed features are well-represented in this simulation, which implies that the model includes the significant physical forcing for this location on this date. The deficiency which is found in the model simulation may be due to an inadequate representation of terrain-

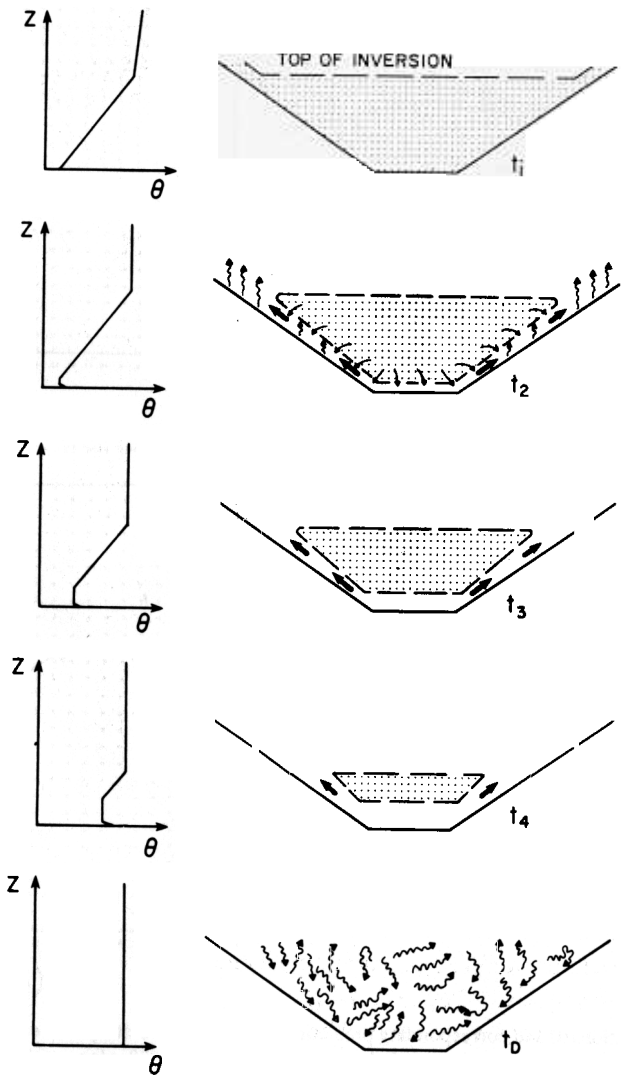

Fig. 5. A schematic illustration of the destruction of the nocturnal inversion in a valley after sunrise (reproduced from Whiteman, 1982).

forcing in this region, since as shown by Young and Pielke (1983) the topography in mountainous Colorado has large variability even at small scales.

The boundary layer behaves differently in complex terrain. As illustrated for the transition between night and daytime flow by Whiteman (1982), reproduced here as Figure 5, upslope flow can alter the intensity of an overlying valley center inversion and thereby strongly influence its subsequent evolution. Observations also suggest that turbulent velocity covariances are different for flow in complex terrain as compared with flat ground at least for the horizontal fluxes (Panofsky *et al.*, 1981, 1982) and for the low frequencies (Højstrup, 1981).

Forced airflow over rough terrain, however, in contrast to mountain-valley flows is predominantly a wave phenomena. If the system is presumed hydrostatic, stratified airflow over irregular terrain results in a forced standing wave over, and upstream from the topographic obstacle with the energy created by the wave drag propagating up into the atmosphere. When the vertical wavelength of the upward propagating wave is optimal, extreme lee-side wind storms can develop as this energy partially reflects back down to the ground (e.g., as discussed by Klemp and Lilly, 1975), although at most other times this energy does not significantly reflect back downward (Anthes and Warner, 1978). A review of current theoretical understanding of forced airflow over rough terrain is given in Smith (1979).

Three-dimensional mesoscale simulations of airflow over actual topographic features are limited in number. Figure 6 presents one example, reported in Seaman (1982), where the perturbation wind field under strong synoptic flow in a portion of southern Wyoming is simulated. In that experiment, significantly stronger winds were predicted (and were observed) north of Arlington (AR), Wyoming during this commonly occuring synoptic situation. Clark and Gall (1982) performed a model simulation and intercomparison with observations in the same area. Mahrer and Pielke (1976) reported on a three-dimensional model simulation of the hilly island of Barbados in the West Indies. Segal *et al.* (1982) used characteristic synoptic flow in order to estimate the three-dimensional flow field over Israel due to both forced airflow and a land-sea breeze circulation. Using a two-dimensional model, Segal *et al.* (1981) demonstrated the inappropriateness in complex terrain of using a p-power law [i.e., $\overline{V}(z) = \overline{V}(10\text{ m})(z/10\text{ m})^p$] to estimate winds aloft.

Three-dimensional simulations of sea-and-land breezes particularly in flat terrain have been performed more extensively than for any other type of mesoscale system. Such studies have been reported in McPherson (1970), Pielke (1974), Warner *et al.* (1978), Hsu (1979), Pielke and Mahrer (1978), Carpenter (1979), and Kikuchi *et al.* (1981). The dynamics of these systems appear to be well understood and only non-scientific reasons seem to be preventing their application to weather forecasting and environmental assessments as discussed in Pielke (1984b).

Sea-and-land breezes develop only when the synoptic flow is light or moderate. Under strong large-scale flow, the mesoscale perturbation is generally weaker although significant weather such as lake effect storms (e.g., see Lavoie, 1972) can occur when cold, polar air advects over warm water which is adjacent to a colder land surface.

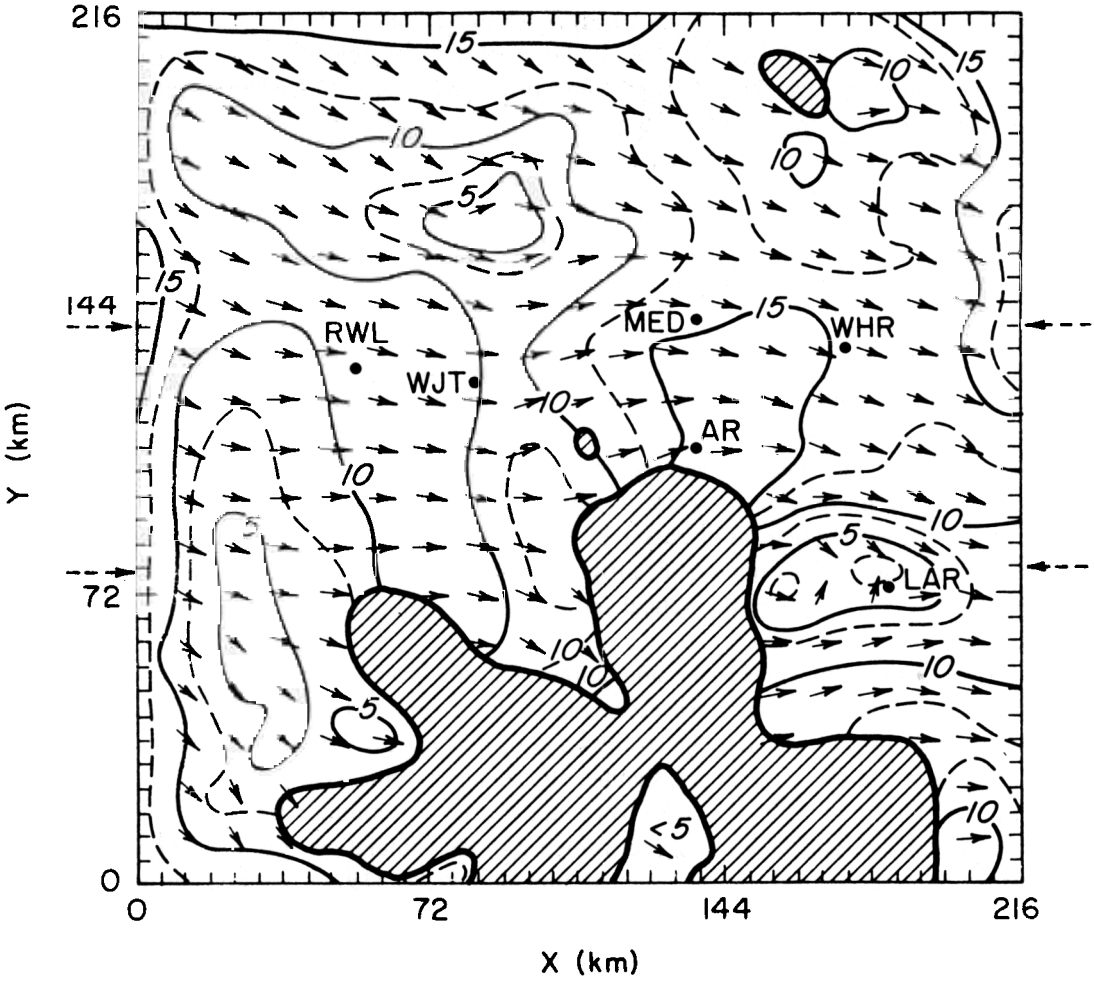

Fig. 6. The predicted horizontal winds in m s^{-1} at 2.5 km for December 22, 1976 at 0900 MST obtained using a three-dimensional mesoscale model (from Seaman, 1982).

Figure 7 presents a model simulation, reproduced from Garstang *et al.* (1980) and Snow (1981) of daily mean wind power averaged between the surface and 100 m over the Chesapeake Bay region of the United States during a climatologically representative polar outbreak. This model simulation was used to design an observational program to assess wind energy in this region. The experimental study area, outlined by the dashed line in Figure 7, was intended to explore the region of large horizontal gradients in average wind power which were suggested to be present by the model.

Figure 8a presents an example of the actual measured wind energy at 170 m over a short period of time during a specific arctic outbreak (on January 30, 1980). The corresponding model prediction at the same level and time are presented in Figure 8b. The model overestimated the wind in the interior of the peninsula; however, the gradient

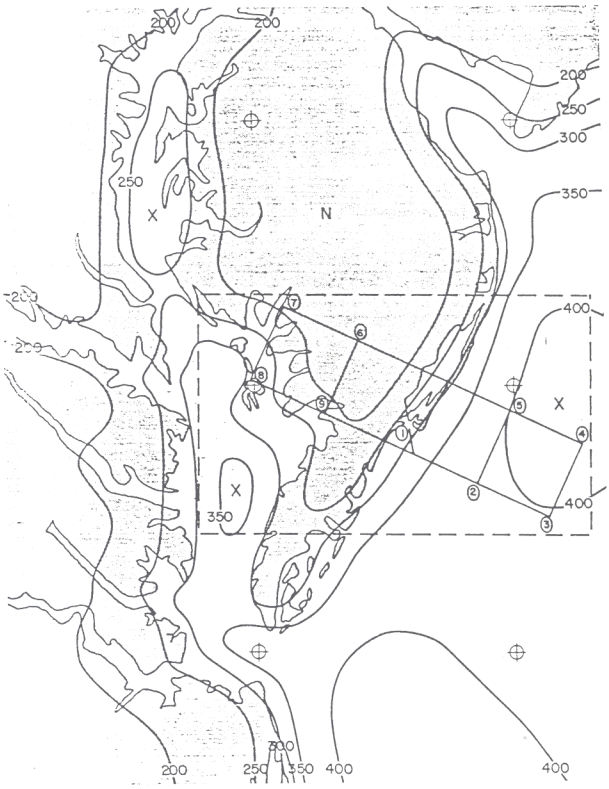

Fig. 7. Model-predicted daily average, layer mean (surface to 100 m) wind power for a typical cold outbreak in the Chesapeake Bay region in the winter. Isolines are in watts per meter squared. The 120 by 30 km rectangular solid outline and the 140 by 100 km rectangular broken outline represent the planned aircraft flight tracks and the surface base verification experiment study area, respectively (reproduced from Garstang *et al.*, 1980).

along the coast and its offshore maximum are well-represented. Figures 9 and 10 provide examples of a comparison between model predicted and observed winds for the same day as given in Figure 8. The statistical validation of the model simulation for this and another date permitted Garstang *et al.* (1980) and Snow (1981) to conclude that "for coastlines with little topography, the mesoscale model usefully predicts the magnitude and location of the centers of maximum and minimum wind power".

The physical explanation of the observed and predicted spatial distribution of winds can be explained as follows. A land surface with higher aerodynamic roughness than a water surface contributes to weaker winds near the surface. Offshore, in contrast, the air accelerates due to a lower roughness and more importantly, because of strong vertical mixing as a result of the ocean-heated surface-layer air. This upward convective transfer of heat not only mixes higher momentum downward from aloft but it creates an offshore pressure gradient along and east of the coast.

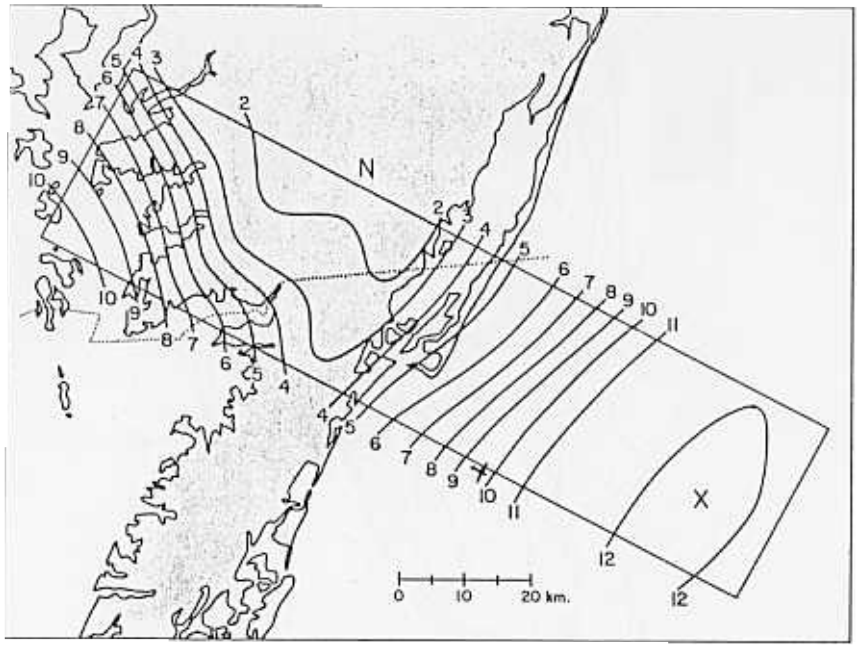

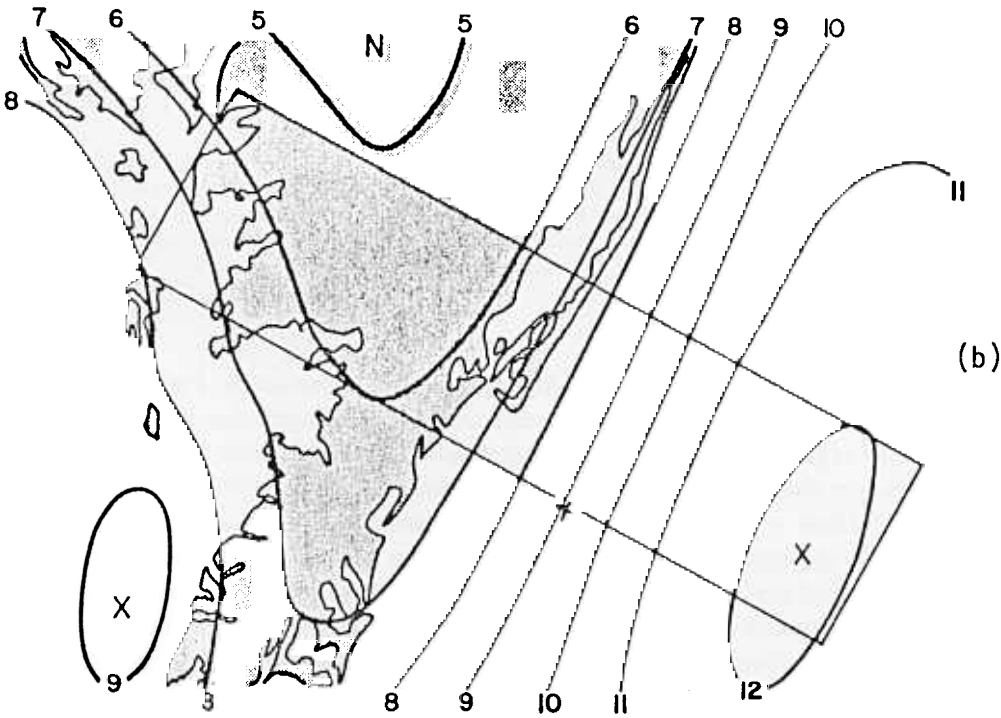

Fig. 8. Areal distribution of measured wind power (in units of 10^2 watts per meter squared) at 170 m above the surface for the 0742–0859 EST, January 30, 1980 aircraft cross-section (top); and the simulated wind power at the same level and date at 0828 EST (bottom) (reproduced from Garstang *et al.*, 1980).

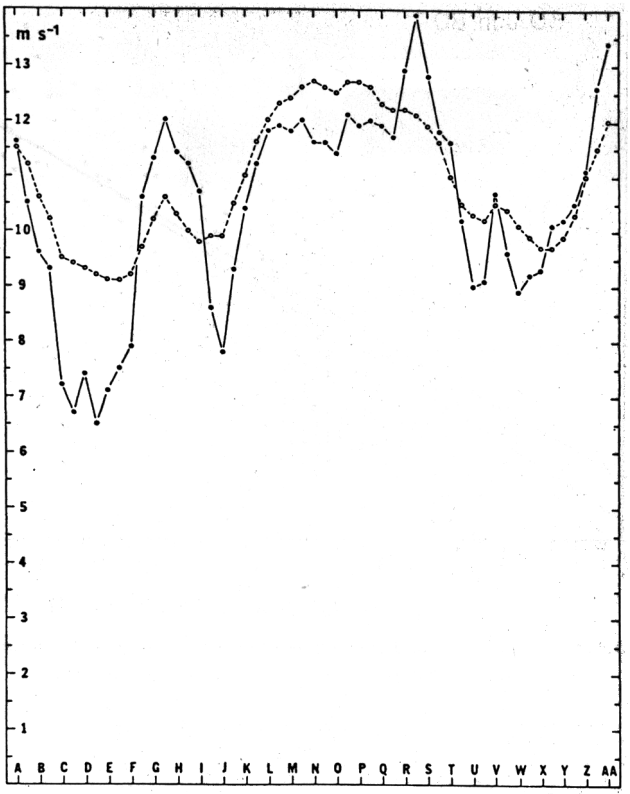

Fig. 9. A comparison between observed (solid line) and predicted (dashed line) wind speed at 170 m above the surface for the aircraft cross-section illustrated in Figure 8. The observed winds are 2 min averaged flight winds (reproduced from Garstang *et al.*, 1980).

5. Interactions between Types of Mesoscale Flows

With only a few exceptions (e.g. Segal *et al.*, 1983), sea-and-land breezes, mountain-valley flows and forced airflow over rough terrain have been investigated in isolation from one another. Figures 11 and 12 present schematically two possible interactions which may play an important role in real-world atmospheric systems. In the first case, a cold pool of air forms in a mountain valley under a situation of weak synoptic flow. Subsequently the synoptic flow increases in speed and develops internal gravity waves with a horizontal wavelength which is close to the characteristic horizontal wavelength of the terrain. When the internal gravity wave achieves sufficient amplitude, the cold air in the valley is flushed out. Theoretical numerical modelling and observational studies of this interaction are required in order to determine its development and evolution as a function of such factors as the overlying thermodynamic stability. In Figure 12, a similar situation is represented except little or no internal gravity wave motion is excited in the overlying air as the synoptic wind flow increases. In that case, the cold air can be scoured out only as a result of shear-induced turbulence at the top of the cold pool.

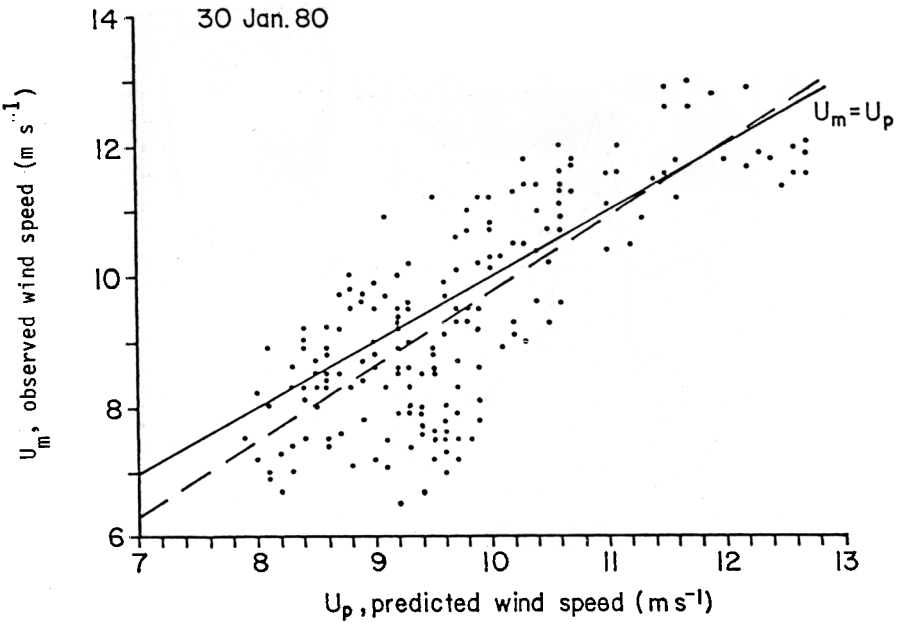

Fig. 10. A comparison of the predicted and all available observed winds obtained during the aircraft flights on January 30, 1980 (reproduced from Garstang *et al.*, 1980).

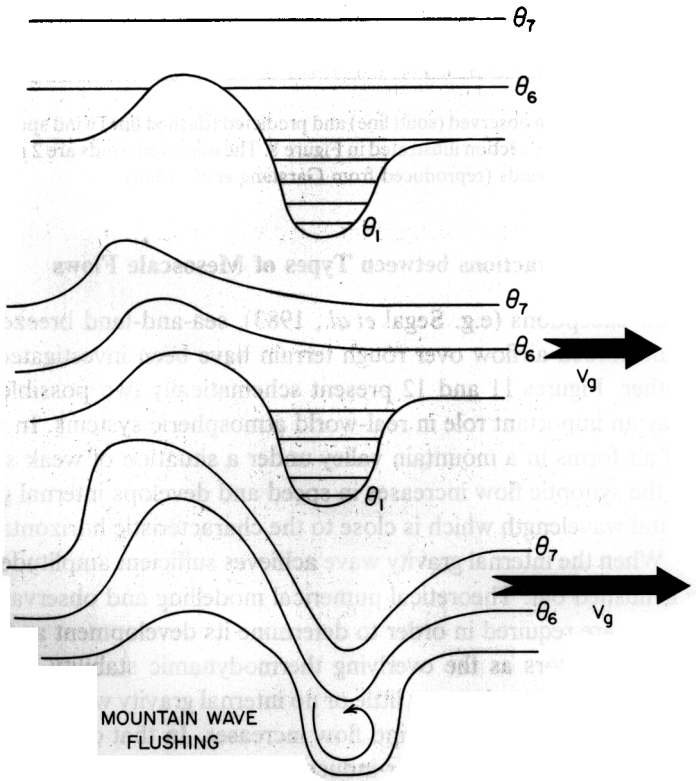

Fig. 11. Schematic illustration of the flushing of cold air in a valley as a forced internal gravity wave develops over an upwind terrain barrier in response to strengthening synoptic flow.

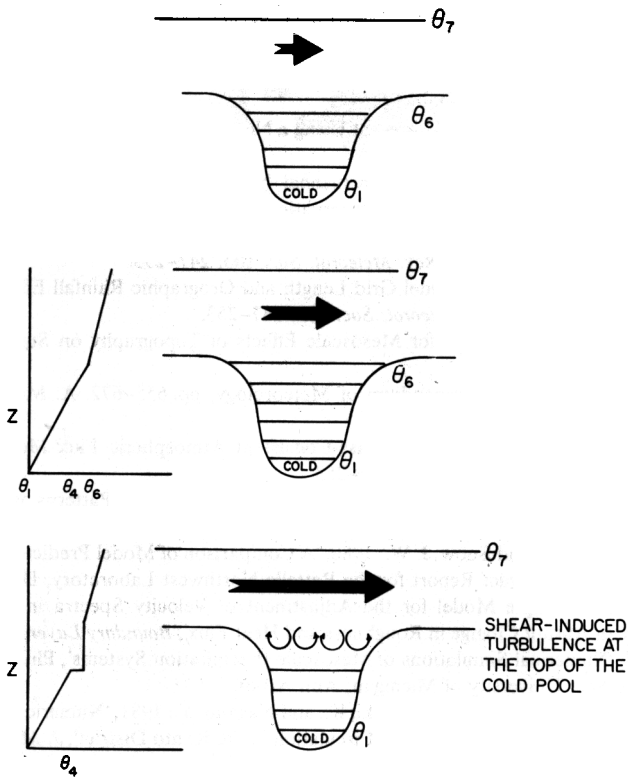

Fig. 12. Schematic illustration of the erosion of cold air in a valley due to shear-induced turbulence at the top of the cold pool as the synoptic wind speed increases.

In the real world, both effects illustrated in Figures 11 and 12 are often likely to occur simultaneously.

Acknowledgement

Partial support for the research reported in this paper was provided by the NSF under grant No. ATM 8304042 and by the National Oceanic and Atmospheric Administration grant No. NA81RAH00001, Amendment 17, Item 15. As usual, Sara Rumley conscientiously and carefully completed the compilation and preparation of the manuscript. Comments relevant to portions of the work reported in this paper by R. Arritt, R. Kessler, Y. Mahrer, R. T. McNider, and M. Segal over the last several years were very valuable in the completion of this paper.

References

Anthes, R. A. and Warner, T. T.: 1978, 'Development of Hydrodynamic Models Suitable for Air Pollution and Other Mesometeorological Studies', *Monthly Weather Rev.* **106**, 1045–1078.

Bader, D. C. and McKee, T. B.: 1983, 'Dynamical Model Simulation of the Morning Boundary Layer Development in Deep Mountain Valleys', *J. Clim. Appl. Meteorol.* **22**, 341–351.

Bell, R. A.: 1978, 'The Forecasting of Orographically Enhanced Rainfall Accumulations Using 10-Level Model Data', *Meteorol. Mag.* **107**, 113–124.

Carpenter, K.: 1979, 'An Experimental Forecast Using a Nonhydrostatic Mesoscale Model', *Quart. J. Roy. Meteorol. Soc.* **105**, 629–655.

Clark, T. L. and Gall, R.: 1982, 'Three-Dimensional Numerical Model Simulations of Airflow Over Moutainous Terrain: A Comparison with Observations', *Monthly Weather Rev.* **110**, 766–791.

Collier, C. G.: 1975, 'A Representation of the Effects of Topography on Surface Rainfall Within Moving Baroclinic Disturbances', *Quart. J. Roy. Meteorol. Soc.* **103**, 247–253.

Collier, C. G.: 1977, 'The Effect of Model Grid Length and Orographic Rainfall Efficiency on Computed Surface Rainfall', *Quart. J. Roy. Meteorol. Soc.* **103**, 247–253.

Danard, M.: 1977, 'A Simple Model for Mesoscale Effects of Topography on Surface Winds', *Monthly Weather Rev.* **105**, 572–581.

Defant, F.: 1951, *Local Winds*, Compendium of Meteorology, pp. 655–672. A. Meteorol. Soc., Boston, Massachusetts.

Dickerson, M. H.: 1978, 'MASCON – A Mass-Consistent Atmospheric Flux Model for Regions with Complex Terrain', *J. Appl. Meteorol.* **17**, 241–253.

Fosberg, M. A., Marlatt, W. E., and Krupnak, L.: 1976, 'Estimating Airflow Patterns over Complex Terrain', U.S., For. Serv., Rocky Mtn. For. Range Exp. Stn., Res. Pap. RM-162, pp. 1–16.

Garstang, M., Pielke, R. A., and Snow, J. W.: 1980, 'A Comparison of Model Predicted to Observed Winds in the Coastal Zone', Contract Report for the Battelle Northwest Laboratory, Department of Energy.

Højstrup, J.: 1981, 'A Simple Model for the Adjustment of Velocity Spectra in Unstable Conditions Downstream of an Abrupt Change in Roughness and Heat Flux', *Boundary Layer Meteorol.* **21**, 341–356.

Hsu, H.-M.: 1979, 'Numerical Simulations of Mesoscale Precipitation Systems', Ph.D. Dissertation, Dept. Atmos. Oceanic Sci., University of Michigan, Ann Arbor.

Kikuchi, Y., Arakawa, S., Kimura, F., Shirasaki, K., and Nagano, Y.: 1981, 'Numerical Study on the Effects of Mountains on the Land and Sea Breeze Circulation in the Kanto District', *J. Meteorol. Soc. Japan* **59**, 723–738.

Klemp, J. B. and Lilly, D. K.: 1975, 'The Dynamics of Wave-Induced Downslope Winds', *J. Atmos. Sci.* **32**, 320–339.

Lavoie, R. L.: 1972, 'A Mesoscale Numerical Model of Lake-Effect Storms', *J. Atmos. Sci.* **29**, 1025–1040.

Mahrer, Y. and Pielke, R. A.: 1976, 'The Numerical Simulation of the Airflow over Barbados', *Monthly Weather Rev.* **104**, 1392–1402.

Martin, C.: 1981, 'Numerical Accuracy in a Mesoscale Meteorological Model', M.S. Thesis, Dept. Environ. Sci., Univ. of Virginia.

McNider, R. T.: 1981, 'Investigation of the Impact of Topographic Circulations on the Transport and Dispersion of Air Pollutants', Ph.D. Dissertation, University of Virginia, Dept. of Environmental Sciences, Charlottesville, Virginia.

McNider, R. T. and Pielke, R. A.: 1984, 'Numerical Simulation of Slope and Mountain Flows', *J. Appl. Meteorol.* (in press).

McPherson, R. D.: 1970, 'A Numerical Study of the Effect of a Coastal Irregularity on the Sea Breeze', *J. Appl. Meteorol.* **9**, 767–777.

Namias, J.: 1983, 'The History of Polar Front and Air Mass Concepts in the United States – An Eyewitness Account', *Bull. Amer. Meteorol. Soc.* **64**, 734–755.

Panofsky, H. A., Larko,, D., Lipschutz, R., and Stone, G.: 1981, 'Spectra over Complex Terrain', Preprint, 4th U.S. National Conf. on Wind Engineering Research, Seattle, Washington, D.C., July 26–29, 1981.

Panofsky, H. A., Larko, D., Lipschutz, R., Stone, G., Bradley, E. F., Bowen, A. J., and Højstrup, J.: 1982, 'Specta of Velocity Components Over Complex Terrain', *Quart. J. Roy. Meteorol. Soc.* **108**, pp. 215–230.

Patnack, P. C., Freeman, B. E., Traci, R. M., and Phillips, G. T.: 1983, 'Improved Simulations of Mesoscale Meteorology', Report Atmospheric Science Laboratory, White Sands Missile Range, NM, ASL CR-83-0127-1.

Pielke, R. A.: 1974, 'A Three-Dimensional Numerical Model of the Sea Breezes over South Florida', *Monthly Weather Rev.* **102**, 115–139.

Pielke, R. A.: 1984a, 'Mesoscale Meteorological Modelling', Academic Press, 612 pp.

Pielke, R. A.: 1984b, 'Mesoscale Dynamics: Thermal and Orographic Mesoscale Atmospheric Systems – An Essay', Chapter in *The Joe Smagorinsky* Volume, Academic Press (in press).

Pielke, R. A. and Mahrer, Y.: 1978, 'Verification Analysis of the University of Virginia Three-Dimensional Mesoscale Model Prediction over South Florida for July 1, 1973', *Monthly Weather Rev.* **106**, 1568–1589.

Rhea, O. J.: 1977, 'Orographic Precipitation Model for Hydrometeorological Use', Ph.D. Dissertation, Dept. of Atmos. Sci., Colorado State Univ., Fort Collins, Colorado.

Seaman, N. L.: 1982, 'A Numerical Simulation of Three-Dimensional Mesoscale Flows over Mountainous Terrain', University of Wyoming, Dept. of Atmospheric Science, Report No. AS 135 under NSF Grant No. ATM-77-17540, 86 pp.

Segal, M., Mahrer, Y., and Pielke, R. A.: 1981, 'Numerical Study of Wind Energy Characteristics over Heterogeneous Terrain – Central Israel Case Study', *Boundary-Layer Meteorol.* **22**, 373–392.

Segal, M., Mahrer, Y., and Pielke, R. A.: 1982, 'Application of a Numerical Mesoscale Model for the Evaluation of Seasonal Persistent Regional Climatological Patterns', *J. Appl. Meteorol.* **21**, 1754–1762.

Segal, M., Mahrer, Y., and Pielke, R. A.: 1983, 'A Numerical Model Study of Meteorological Patterns Associated with a Lake Confined by Mountains – The Dead Sea Case', *Quart. J. Roy. Meteorol. Soc.* **109**, 549–564.

Sherman, C. E.: 1978, 'A Mass-Consistent Model for Wind Fields over Complex Terrain', *J. Appl. Meteorol.* **17**, 312–319.

Smith, R. B.: 1979, 'The Influence of Mountains on the Atmosphere', in *Adv. Geophys.* **21**, 87–230.

Snow, J. W.: 1981, 'Wind Power Assessment Along the Atlantic and Gulf Coasts of the U.S.', Ph.D. Dissertation, Dept. of Environmental Sciences, University of Virginia, Charlottesville.

Warner, T. J., Anthes, R. A., and McNab, A. L.: 1978, 'Numerical Simulations with a Three-Dimensional Mesoscale Model', *Monthly Weather Rev.* **106**, 1079–1099.

Whiteman, C. D.: 1981, 'Temperature Inversion Buildup in Valleys of the Rocky Mountains', Second Conference on Mountain Meteorology, Steamboat Springs, CO. Am. Meteorol. Soc., Boston, MA.

Whiteman, C. D.: 1982, 'Breakup of Temperature Inversions in Deep Mountain Valleys: Part I. Observations', *J. Appl. Meteorol.* **21**, pp. 270–289.

Young, G. S. and Pielke, R. A.: 1983, 'Application of Terrain Height Variance Spectra to Mesoscale Modeling', *J. Atmos. Sci.* **40**, 2555–2560.